Latches

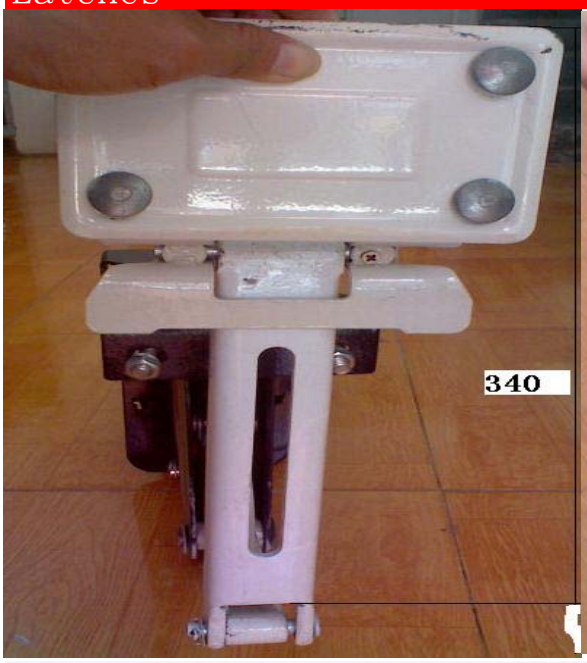

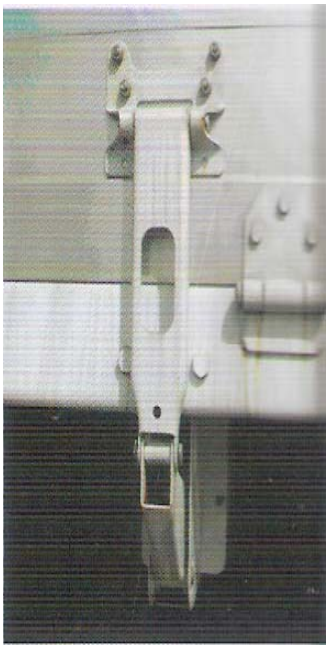

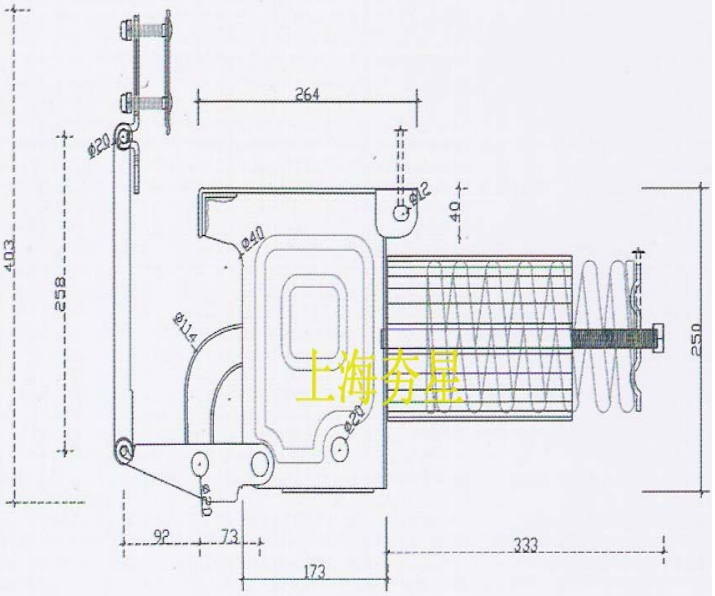

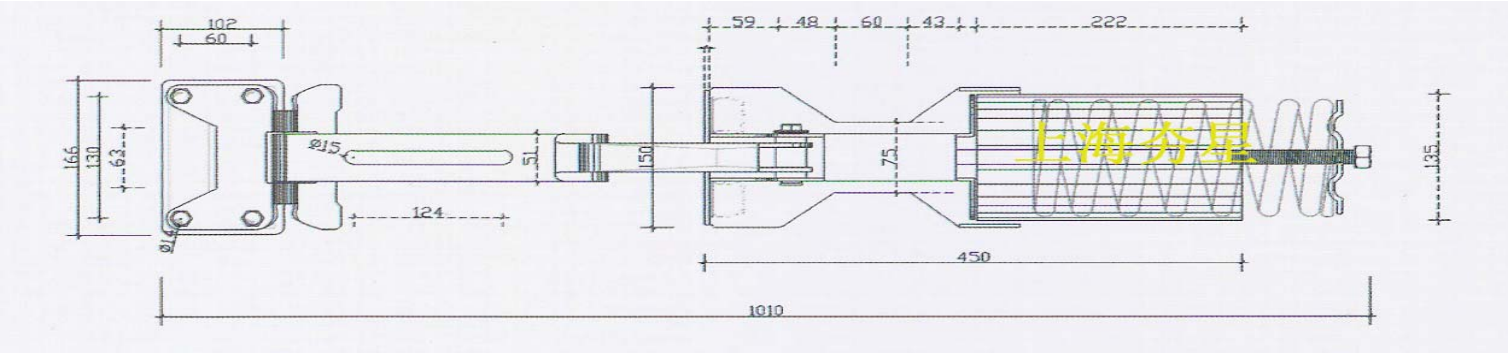

Part No: 028400
Material: Steel
Weight: 14.576KG

TEL: +86 21 56685622 FAX: +86 21 66519637
E-mail:truckbodyfittings@gmail.com
WEB:www.truckbodyfittings.com